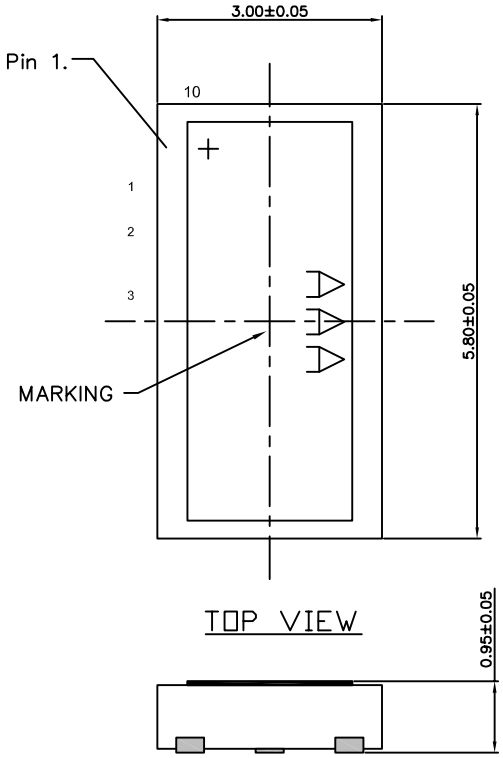

TOP VIEW

SIDE VIEW

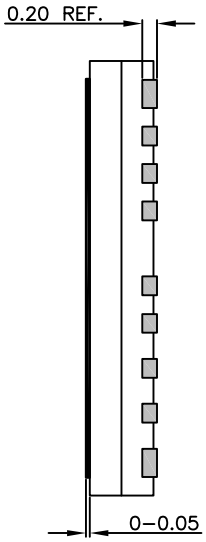

SIDE VIEW

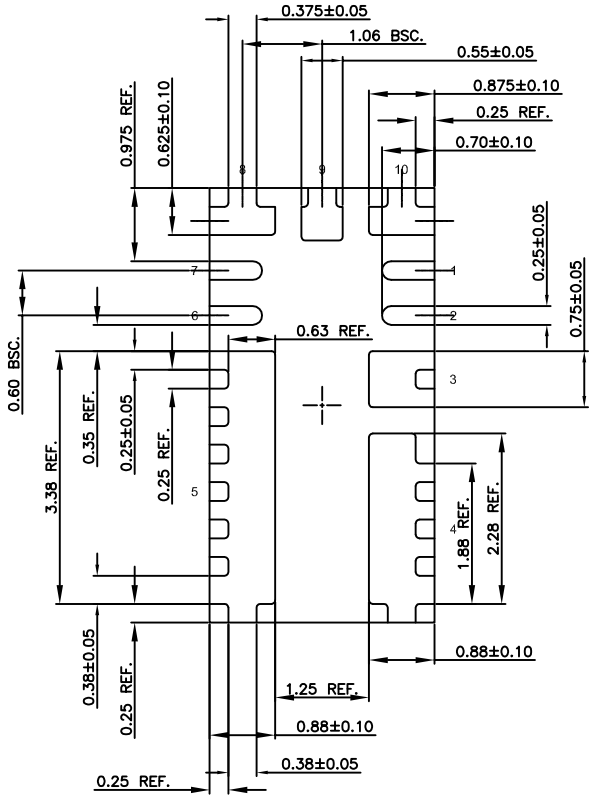

BOTTOM VIEW

NOTES:

1. DIMENSIONING AND TOLERANCING CONFORME TO ASME Y14.5M – 1994.
2. ALL DIMENSIONS ARE IN MILLIMETERS, θ IS IN DEGREES.
3. N IS THE TOTAL NUMBER OF TERMINALS.
4. DIMENSION b APPLIES TO METALLIZED TERMINAL AND IS MEASURED BETWEEN 0.15 AND 0.30mm FROM TERMINAL TIP. IF THE TERMINAL HAS THE OPTIONAL RADIUS ON THE OTHER END OF THE TERMINAL,THE DIMENSION b SHOULD NOT BE MEASURED IN THAT RADIUS AREA.
5. PIN #1 ID ON TOP WILL BE LASER MARKED.
6. MARKING SHOWN IF FOR PACKAGE ORIENTATION ONLY.
7. ALL DIMENSIONS APPLY TO PBFREE (+) PKGCODES ONLY.
8. PACKAGE CODE: P105A3F+1

–DRAWING NOT TO SCALE–

maxim integrated™

TITLE:
PACKAGE OUTLINE, 10L
FCQFN PKG., FLIP CHIP

APPROVAL	DOCUMENT CONTROL NO.	REV.	
	21-100119	A	1/1