THIS DRAWING IS THE PROPERTY OF ANALOG DEVICES INC. IT IS NOT TO BE REPRODUCED OR COPIED, IN WHOLE OR IN PART, OR USED IN FURNISHING INFORMATION TO OTHERS, OR FOR ANY OTHER PURPOSE DETRIMENTAL TO THE INTERESTS OF ANALOG DEVICES.
THE EQUIPMENT SHOWN HEREON MAY BE PROTECTED BY PATENTS OWNED OR CONTROLLED BY ANALOG DEVICES.

RELAY CONTROL CHART

CONTROL	CODE	DEVICE	FUNCTION	CONNECTOR

JUMPER TABLE

JP#	ON	OFF
1		
2		
3		
4		
5		

* SEE ASSEMBLY INSTRUCTIONS

REVISIONS

REV	DESCRIPTION	DATE	APPROVED
A	INITIAL RELEASE	02DEC20	K. UNAL

ADF4382 CUSTOMER EVALUATION BOARD

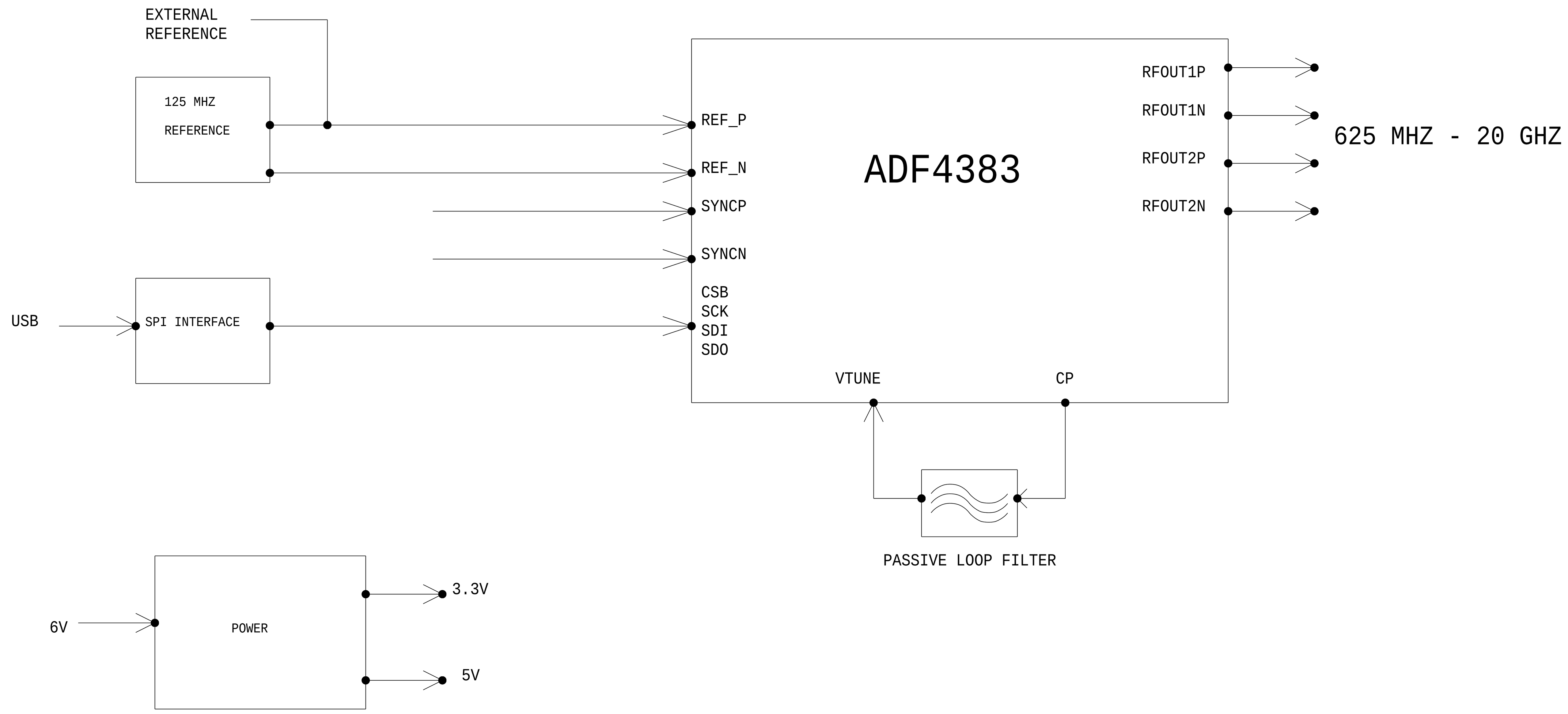

P.O SPEC.	BK/BD SPEC.	SOCKET OEM	OEM PART#	HANDLER

	DATE
TEMPLATE ENGINEER -	N/A
HARDWARE SERVICES -	02DEC20
HARDWARE SYSTEMS -	N/A
TEST ENGINEER -	N/A
COMPONENT ENGINEER -	02DEC20
TEST PROCESS -	N/A
HARDWARE RELEASE -	02DEC20
DESIGNER -	02DEC20
PTD ENGINEER -	02DEC20
CHECKER -	N/A

SCHEMATIC

ANALOG DEVICES

HW TYPE : Customer Evaluation
Product(s): ADF4383
: NA
PACKAGE : 48-lead 7X7X1.0 LGA-family
: Pitch-pitch StyleVendor Style
<User Define>
<User Define>
<User Define>

MASTER PROJECT TEMPLATE: TBD
TESTER TEMPLATE: 066234_a

UNLESS OTHERWISE SPECIFIED DIMENSIONS ARE IN INCHES
TOLERANCES
DECIMALS: X.XX +-0.010, X.XXX +-0.005
FRACTIONS: +-1/32
ANGLES: +-2

DRAWING NO. 02_084219
REV. A

SIZE D | SCALE 1:1 | CODE ID NO. CodeID | SHEET 1 OF 5

REVISIONS			
REV	DESCRIPTION	DATE	APPROVED

MATCH TO REF PATH AND SYNC PATHS

LOOP FILTER

LOOP FILTER USE 0603 COMPONENTS UNLESS SPECIFIED
LOOP FILTER CAPACITORS USE COG/NPO

PLACE RESISTOR CLOSE TO CP PIN
PLACE CAP CLOSE TO CP PIN

ADF4383BCCZ

ATC550L104KT 100NF 0402 CAP

RFOUT1P, RFOUT1N, RFOUT2P, RFOUT2N TO BE EQUAL LENGTH FOR PHASE MATCHING

RF SIGNALS TO BE 50 OHM TRACES

ANALOG DEVICES	SCHEMATIC		
	HW TYPE : Customer Evaluation Product(s): ADF4383 : NA		
THIS DRAWING IS THE PROPERTY OF ANALOG DEVICES INC. IT IS NOT TO BE REPRODUCED OR COPIED, IN WHOLE OR IN PART, OR USED IN FURNISHING INFORMATION TO OTHERS, OR FOR ANY OTHER PURPOSE DETRIMENTAL TO THE INTERESTS OF ANALOG DEVICES. THE EQUIPMENT SHOWN HEREON MAY BE PROTECTED BY PATENTS OWNED OR CONTROLLED BY OWNED ANALOG DEVICES.	DESIGN VIEW <DESIGN_VIEW>	DRAWING NO. 02_084219	REV A
	PTD ENGINEER -	SIZE D / SCALE 1:1	SHEET 2 OF 5

REVISIONS			
REV	DESCRIPTION	DATE	APPROVED

DUAL FOOTPRINT REFERENCE, SUPPORT 5X7, 9X14 FOOTPRINTS

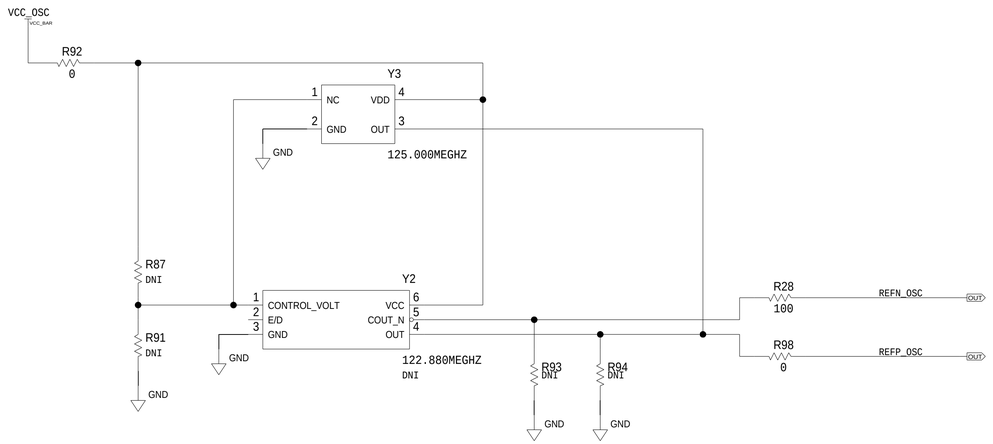

CAL PATH: MATCH TO REF PATH AND CLKOUT PATHS

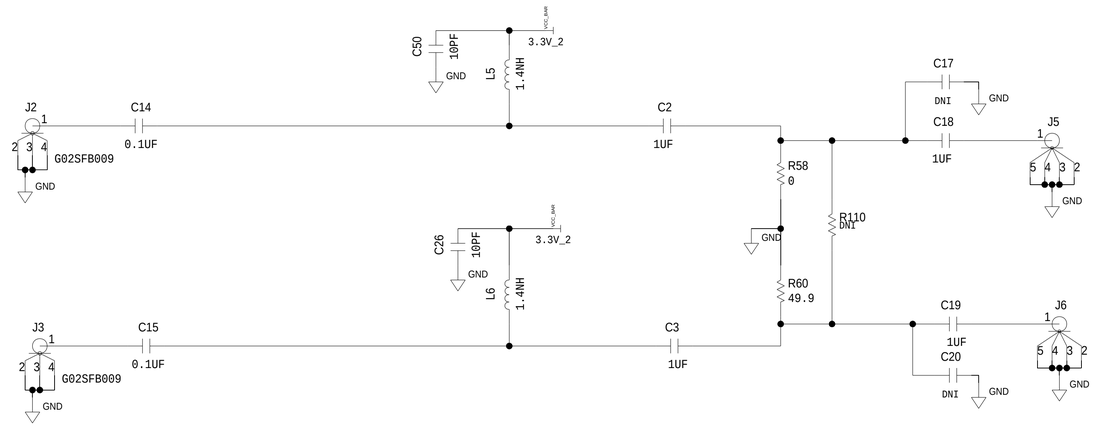

ANALOG DEVICES	SCHEMATIC		
THIS DRAWING IS THE PROPERTY OF ANALOG DEVICES INC. IT IS NOT TO BE REPRODUCED OR COPIED, IN WHOLE OR IN PART, OR USED IN FURNISHING INFORMATION TO OTHERS, OR FOR ANY OTHER PURPOSE DETRIMENTAL TO THE INTERESTS OF ANALOG DEVICES. THE EQUIPMENT SHOWN HEREON MAY BE PROTECTED BY PATENTS OWNED OR CONTROLLED BY OWNED ANALOG DEVICES.	HW TYPE : Customer Evaluation Product(s): ADF4383 : NA		
	DESIGN VIEW <DESIGN_VIEW>	DRAWING NO. 02_084219	REV A
	PTD ENGINEER -	SIZE D	SCALE 1:1
		SHEET 3 OF 5	

REVISIONS			
REV	DESCRIPTION	DATE	APPROVED

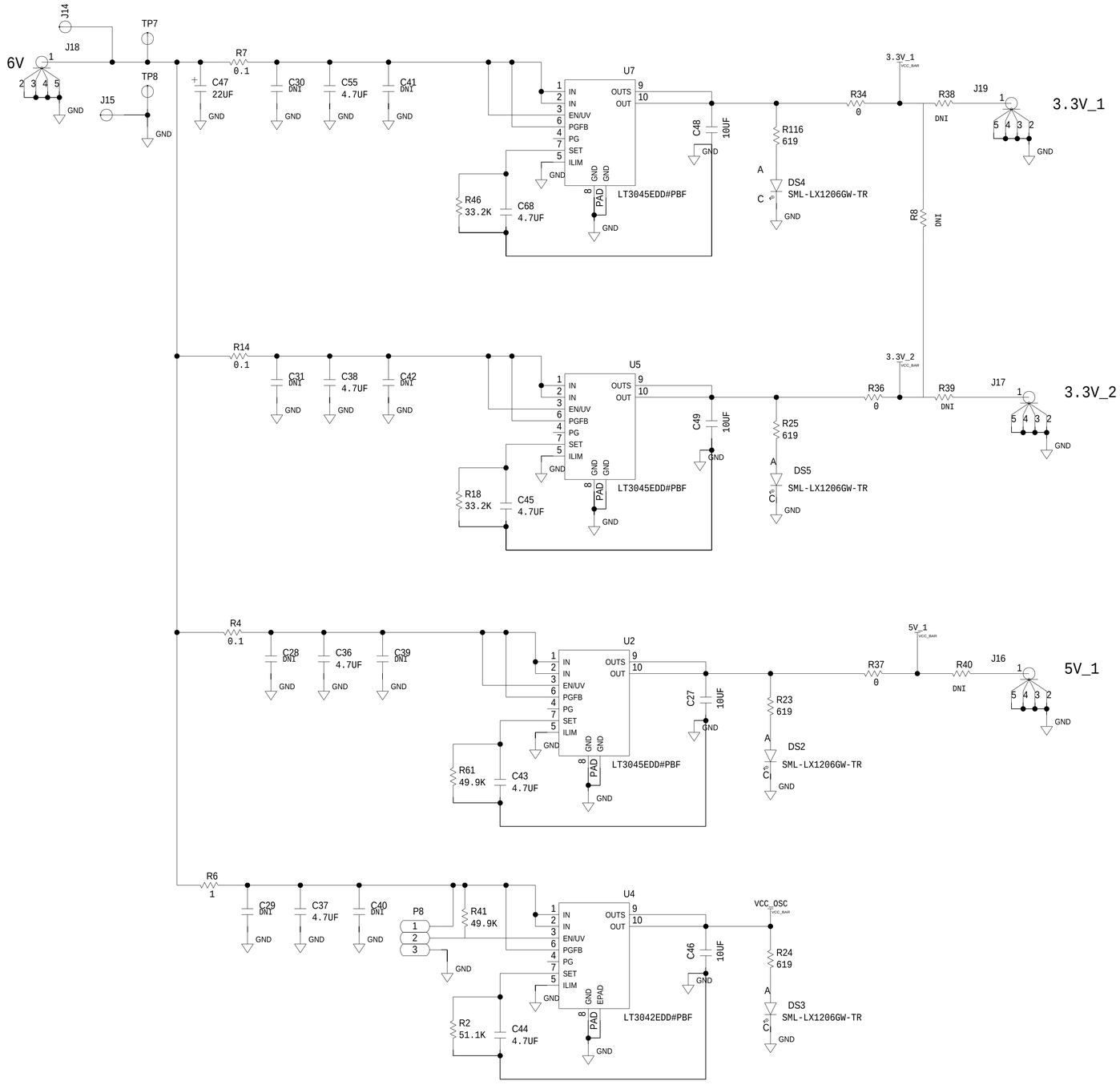

HW TYPE	: Customer Evaluation
Product(s)	: ADF4383
	: NA

SCHEMATIC

DESIGN VIEW: <DESIGN_VIEW>	DRAWING NO.: 02_084219		REV: A
PTD ENGINEER: -	SIZE: D	SCALE: 1:1	SHEET 4 OF 5

THIS DRAWING IS THE PROPERTY OF ANALOG DEVICES INC.
IT IS NOT TO BE REPRODUCED OR COPIED, IN WHOLE OR IN PART, OR USED IN FURNISHING INFORMATION TO OTHERS, OR FOR ANY OTHER PURPOSE DETRIMENTAL TO THE INTERESTS OF ANALOG DEVICES.
THE EQUIPMENT SHOWN HEREON MAY BE PROTECTED BY PATENTS OWNED OR CONTROLLED BY OWNED ANALOG DEVICES.

REVISIONS			
REV	DESCRIPTION	DATE	APPROVED

SDP INTERFACE

EEPROM FOR SDP CONNECTOR

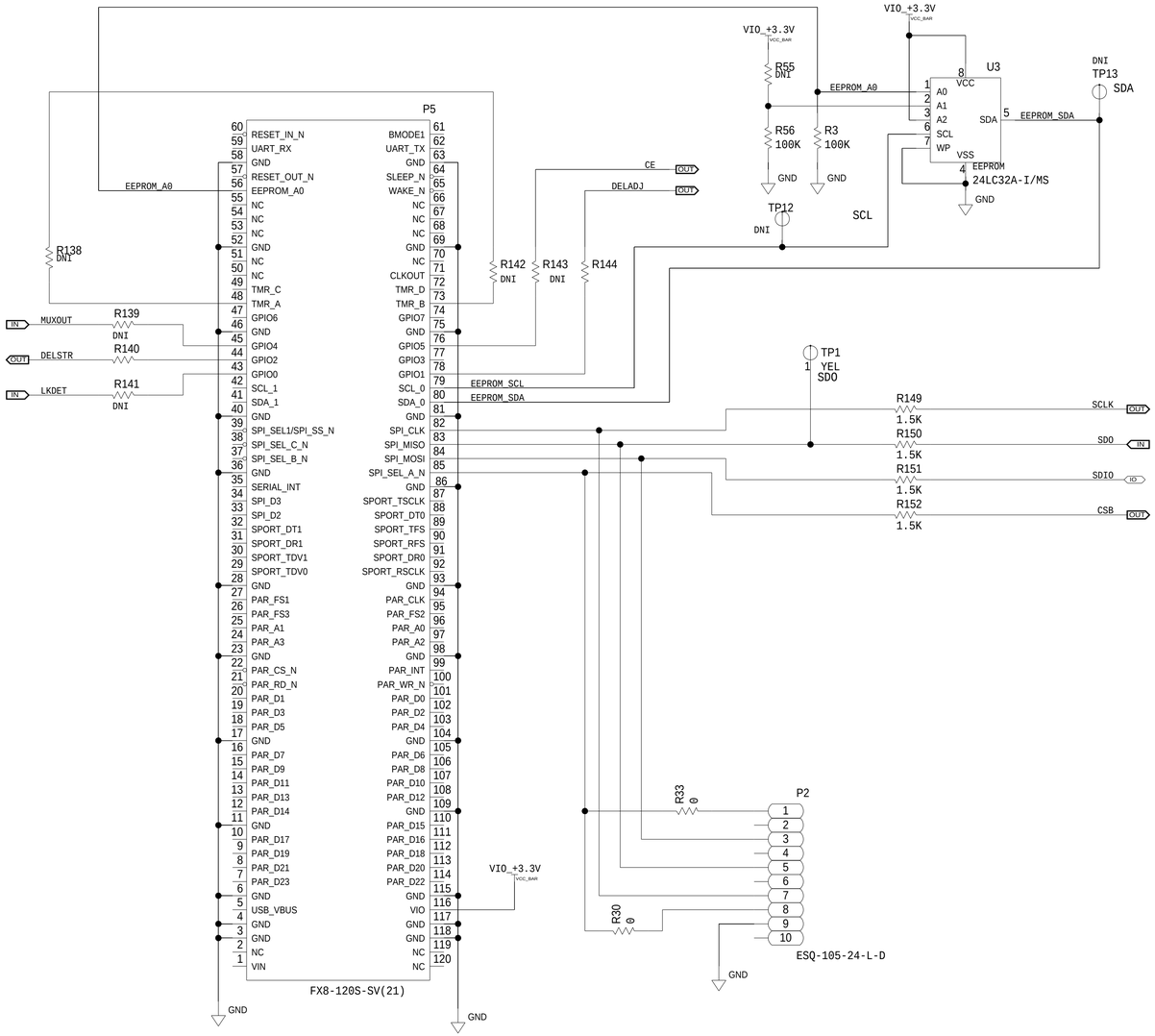

ANALOG DEVICES	SCHEMATIC		
THIS DRAWING IS THE PROPERTY OF ANALOG DEVICES INC. IT IS NOT TO BE REPRODUCED OR COPIED, IN WHOLE OR IN PART, OR USED IN FURNISHING INFORMATION TO OTHERS, OR FOR ANY OTHER PURPOSE DETRIMENTAL TO THE INTERESTS OF ANALOG DEVICES. THE EQUIPMENT SHOWN HEREON MAY BE PROTECTED BY PATENTS OWNED OR CONTROLLED BY OWNED ANALOG DEVICES.	HW TYPE : Customer Evaluation Product(s): ADF4383 : NA		
	DESIGN VIEW <DESIGN_VIEW>	DRAWING NO. 02_084219	REV A
	PTD ENGINEER -	SIZE D / SCALE 1:1	SHEET 5 OF 5