Analog Devices CONFIDENTIAL

THIS DRAWING IS THE PROPERTY OF ANALOG DEVICES INC. IT IS NOT TO BE REPRODUCED OR COPIED, IN WHOLE OR IN PART, OR USED IN FURNISHING INFORMATION TO OTHERS, OR FOR ANY OTHER PURPOSE DETRIMENTAL TO THE INTERESTS OF ANALOG DEVICES. THE EQUIPMENT SHOWN HEREON MAY BE PROTECTED BY PATENTS OWNED OR CONTROLLED BY ANALOG DEVICES.

RELAY CONTROL CHART

CONTROL	CODE	DEVICE	FUNCTION	CONNECTOR

JUMPER TABLE

JP#	ON	OFF
1		
2		
3		
4		
5		

* SEE ASSEMBLY INSTRUCTIONS

REVISIONS

REV	DESCRIPTION	DATE	APPROVED
A	INITIAL RELEASE	25AP24	J. PATTERSON
B	CHANGES AS PER ECR-122107	11SEP24	J. PATTERSON

ADES1830

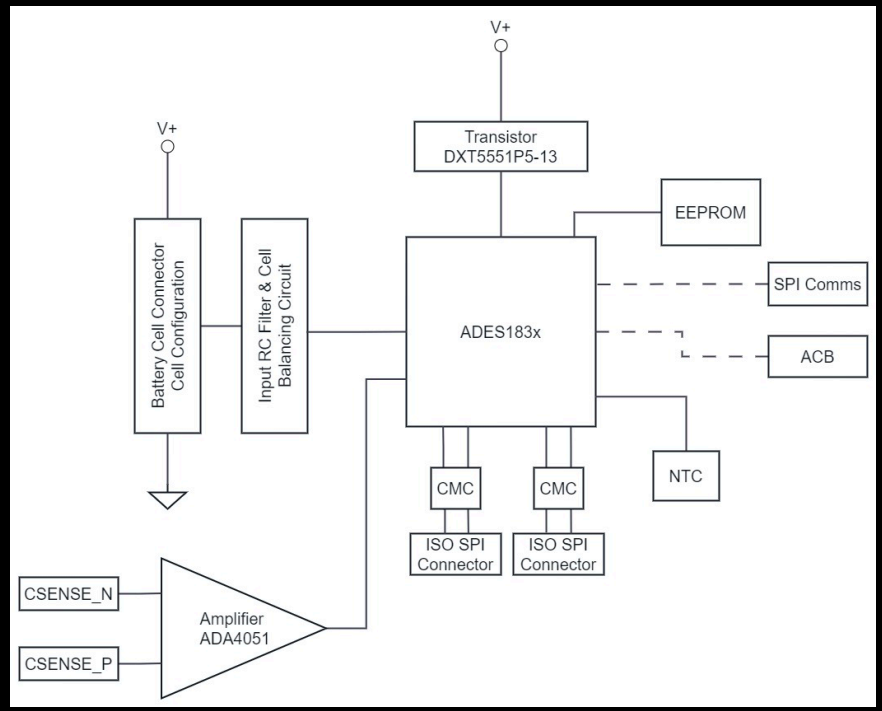

P.O SPEC.	BK/BD SPEC.	SOCKET OEM	OEM PART#	HANDLER

		DATE
TEMPLATE ENGINEER	-	
HARDWARE SERVICES	-	
HARDWARE SYSTEMS	-	
TEST ENGINEER	-	
COMPONENT ENGINEER	-	
TEST PROCESS	-	
HARDWARE RELEASE	-	
DESIGNER	JOANNA PATTERSON	12.08.2024
PTD ENGINEER	-	
CHECKER	-	

SCHEMATIC

ANALOG DEVICES

HW TYPE : Customer Evaluation
Product(s): ADBMS6830
: LT8302
PACKAGE : 80-lead 15X15_MM PackageType-family
: Pitch-pitch StyleVendor Style

<User Define>
<User Define>
<User Define>

MASTER PROJECT TEMPLATE: TBD
TESTER TEMPLATE: no_template

UNLESS OTHERWISE SPECIFIED DIMENSIONS ARE IN INCHES
TOLERANCES
DECIMALS: X.XX +-0.010, X.XXX +-0.005
FRACTIONS: +-1/32
ANGLES: +-2

DRAWING NO. 02_081290
REV. B

SIZE D | SCALE 1:1 | CODE ID NO. CodeID | SHEET 1 OF 4

Analog Devices CONFIDENTIAL

REVISIONS			
REV	DESCRIPTION	DATE	APPROVED

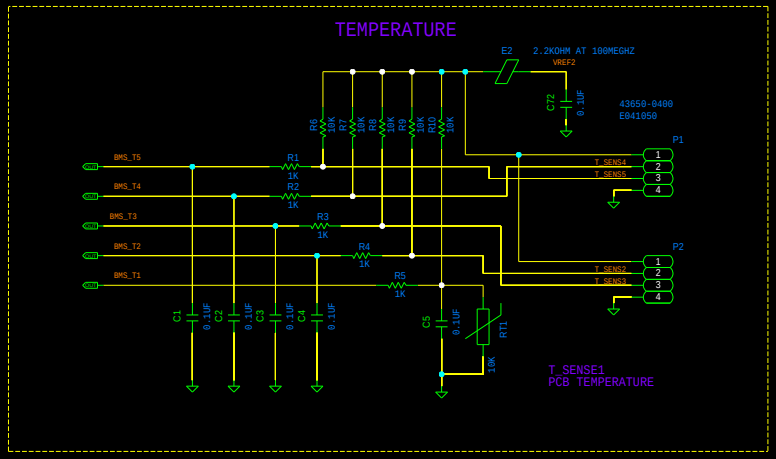

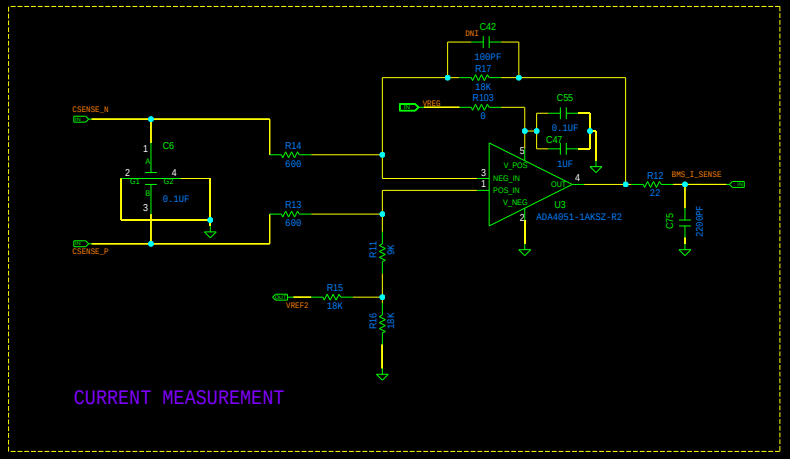

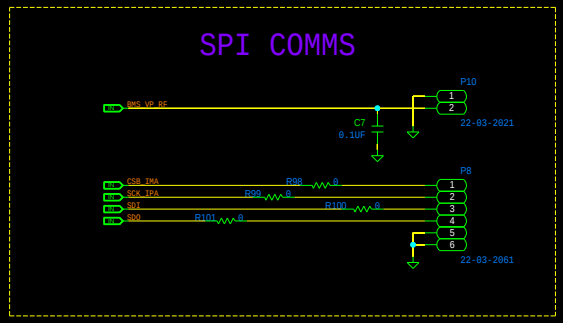

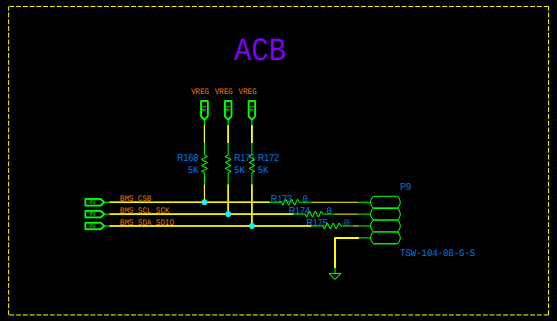

ANALOG DEVICES

SCHEMATIC

HW TYPE : Customer Evaluation
Product(s): ADBMS6830
: LT8302

DESIGN VIEW	DRAWING NO.	REV
<DESIGN_VIEW>	02_081290	B

PTD ENGINEER	SIZE	SCALE	SHEET	OF
-	D	1:1	2	4

Analog Devices CONFIDENTIAL

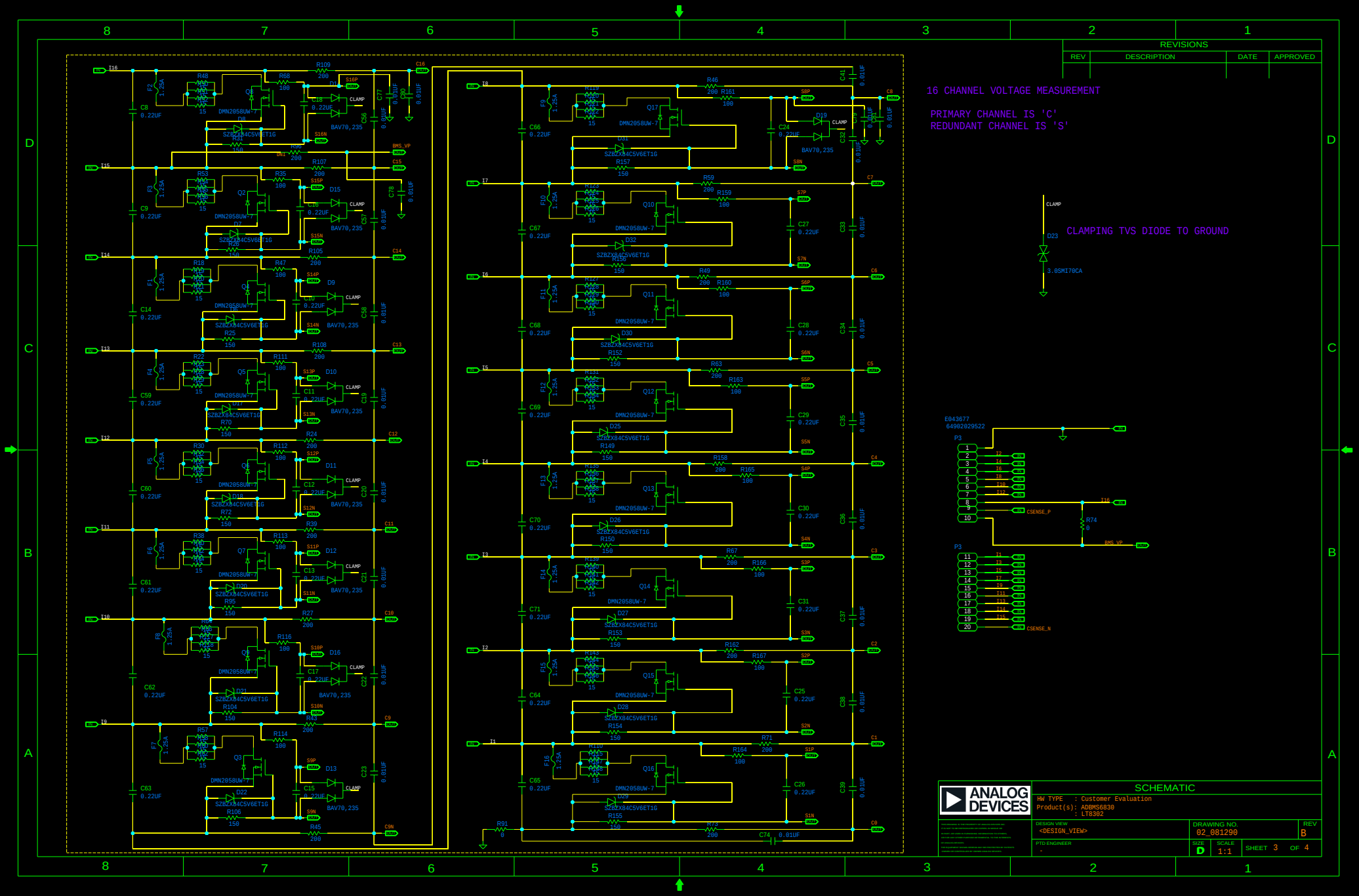
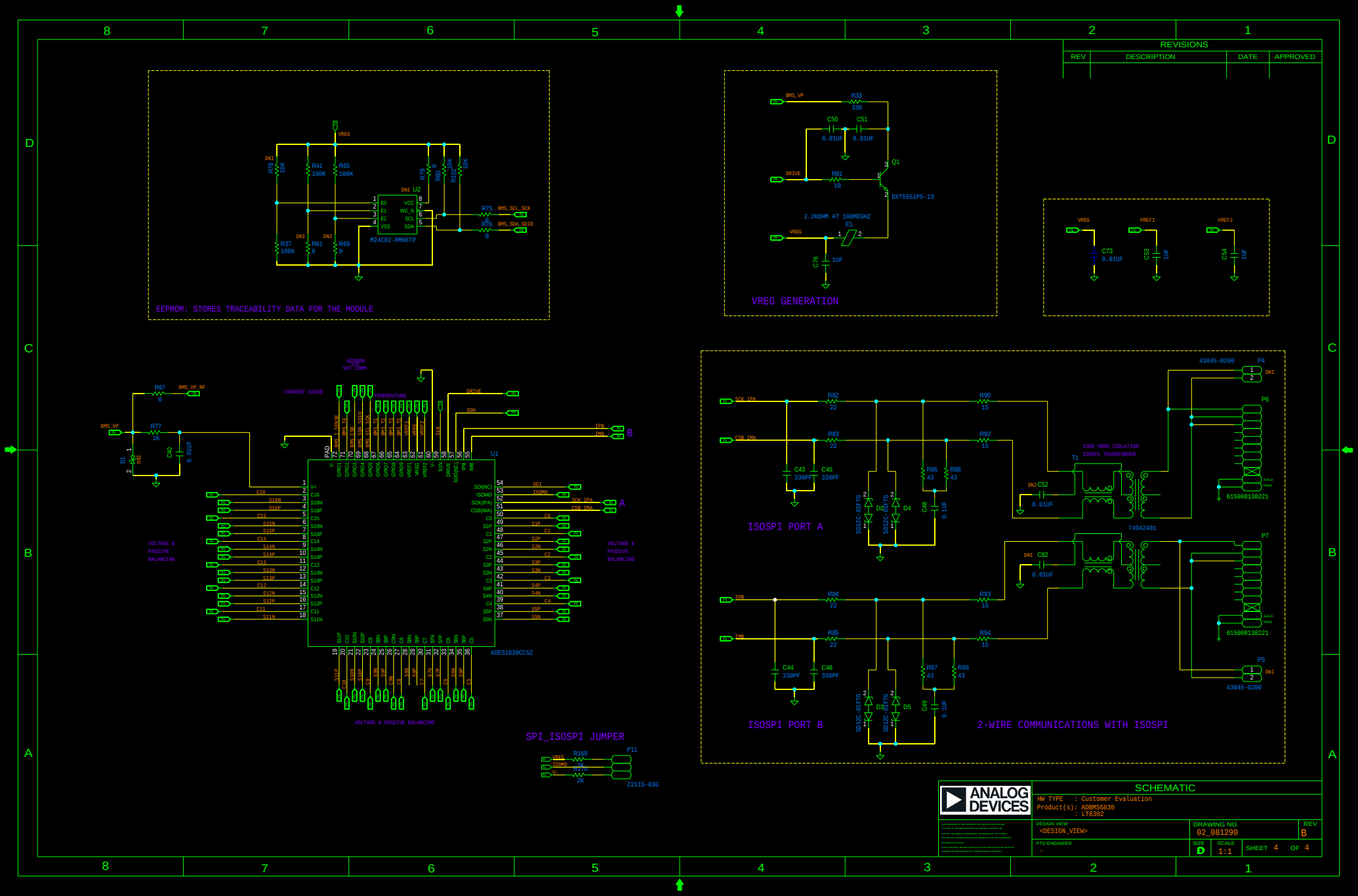
Analog Devices CONFIDENTIAL